P-Max 4 Flush Lens or Regressed 1-3 inch

RECESSED PERIMETER

TYPE

PROJECT

Overview

- Max /maks/, noun 1. a maximum amount or setting
- Max Series was designed to maximize light brightness in a general office space, within a reasonable budget. Max Series is a perfect product to use if you're looking for a clean, stark appearance as well.
- DESIGNER SELECTIONS
- Max Series is available as a standard recessed or perimeter grid/gyp board install, available in a width of four inches or two and half inches.
- Max 4 series is available in dropped, flush or regressed lens.
- Max 2.5 series is available in dropped or flush lens.
- Max perimeter can be mounted in grid/gyp board ceilings and can be installed at different regressed heights. Max perimeter is also available as a wall grazer.
- Max Series is available in almost any CCT available in the market, we've selected the most popular, but don't let that stop you from asking for something different.
- Max Series qualifies as "Made in America" and “American Made”, and it is also part of our ECO sustainable end of life program.
- The Max is available as part of our EZ install / ship program in our two-and-a-half inch profile. EZ and fast install for contractors and ships quickly.
- For all: ies files, pictures, instructions, rfa files, and warranties...scroll to bottom

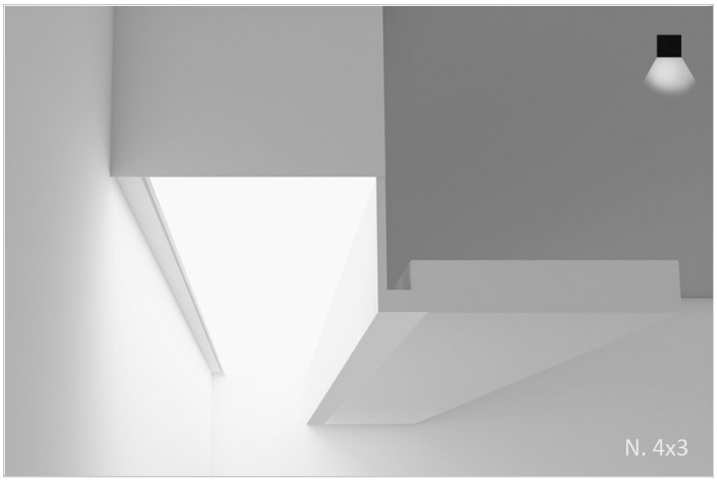

P-Max 4 Flush Lens or Regressed 1-3 inch

RECESSED PERIMETER

TYPE

PROJECT

Ordering Format

PART NUMBER: PMX 4-RFR

Size	Lumens Direct	CCT Available	CRI Available	Direct Optics
2 = 2 Feet	**D3** = 350 LPF	**27** = 2700 Kelvins	**80** = 80-85 CRI	**FWF** = Frosted White Flush 0 inch depth
3 = 3 Feet	**D5** = 500 LPF	**30** = 3000 Kelvins	**90** = 90-95 CRI	**FWF-1** = Frosted White Flush 1 inch depth
4 = 4 Feet	**D7** = 750 lpf	**35** = 3500 Kelvins		**FWF-2** = Frosted White Flush 2 inches depth
5 = 5 Feet	**D10** = 1000 LPF	**40** = 4000 Kelvins		**FWF-3** = Frosted White Flush 3 inches depth
6 = 6 Feet		**TW** = Tunable White 2700-5000 Kelvins		**FWF-ASYM** = Flush Asymmetric Optic Lens
7 = 7 Feet				**FWF1-ASYM** = 1" Regressed Asymmetric Optic Lens
8 = 8 Feet				
CL = Custom Length				

Mounting	Driver / Voltage	Fixture Finish	Options
T1 = 9/16 Flat Tee (Tegular Tile)	**ND 1** = Non-Dim Universal 120VAC	**W** = Standard White	**AWN** = Lutron Athena Wireless Node (RF only)
T2 = 15/16 Flat Tee (Flat Tile)	**ND 2** = Non-Dim Universal 277VAC		**AWNS** = Lutron Athena Wireless Node (with Sensor)
T3 = 9/16 Slot-Grid Tee (Tegular Tile)	**ZT 1** = 0-10v dimming 120v dual 1%		**OS** = Occupancy Sensor
S = 9/16 Slot-Grid Tee (Tegular Tile)	**ZT 2** = 0-10v dimming 277v dual 1%		**TEL** = One Telescoping End +- 6
S = 9/16 Interlude Tee (Tegular Tee)	**LE1** = Lutron EcoSystem 1% DLC EE CCR / PWM SoftOnFadeToBlack		**EMD** = Emergency Driver - Battery Backup 120-277VAC
SF = Trimless	**CC** = Custom Control - Add in notes		**L** = L = Illuminated L Corner Section
F = Trim			**WH** = Whip 6'

NOTES

ORDER NUMBER:

P-Max 4 Flush Lens or Regressed 1-3 inch

RECESSED PERIMETER

TYPE

PROJECT

Construction & Mounting

HOUSING
Extruded aluminum housings are supplied in nominal lengths of 2 ft - 8ft for your recessed application. Fixtures may be continuously rowed (contact factory for details). Internal components are constructed from min. 20-gauge die-formed steel. Easy access to driver and LED boards. Custom sizes are available. Ceiling thickness unrestricted. Can be flush mounted or regressed 1,2,3, inches.

REFLECTOR
Integral powder-coated LED housing with excessive reflectivity for increased lumen output

FINISH
Standard powder-coated colors are white. Troffer style fixtures are not limited to white, consult factory for special applications.

OPTICS
Flush lens formulated for LED light sources. Snap-in/out lens removal.

MOUNTING
Our recessed fixtures are made to be mounted in S-slot grid, T-bar, sheetrock . See mounting detail. Other ceiling types, please consult the factory, We can accommodate many different applications.

PMAX4 GRID (FLUSH)

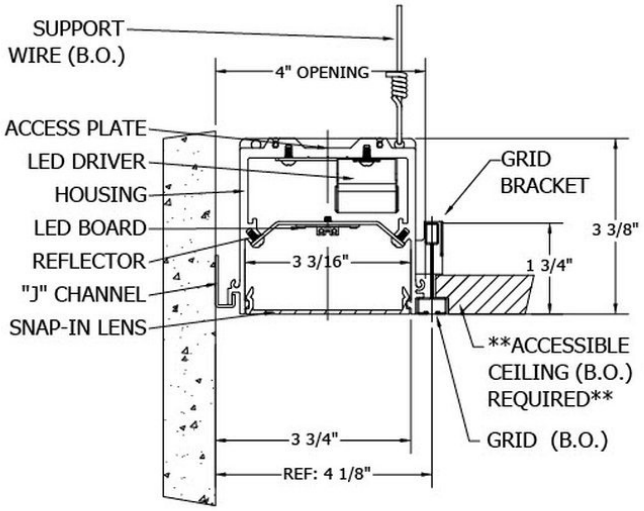

CROSS SECTION

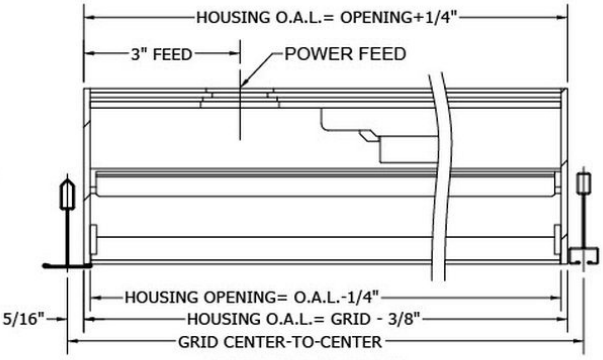

SIDE SECTION

P-Max 4 Flush Lens or Regressed 1-3 inch

RECESSED PERIMETER

TYPE

PROJECT

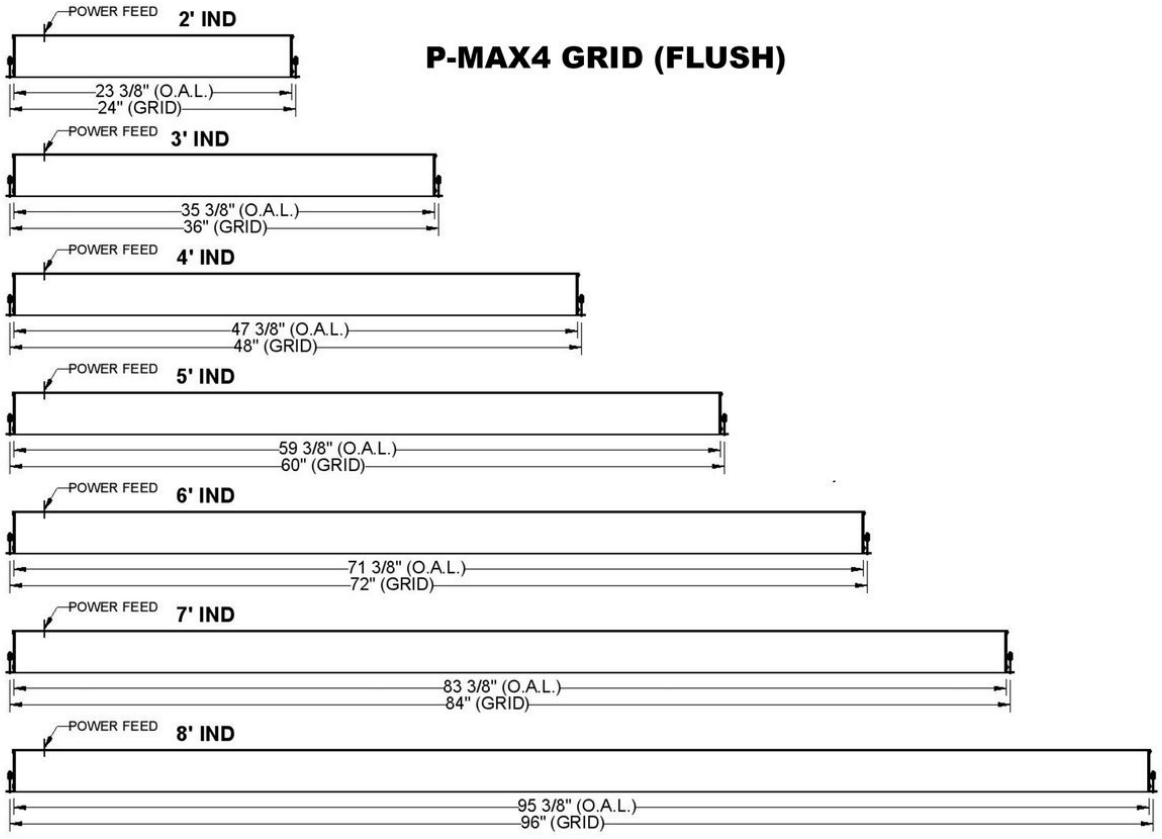

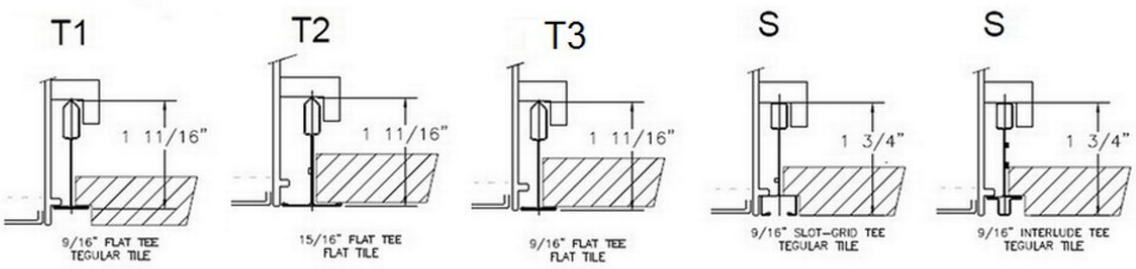

P-Max 4 Flush Lens or Regressed 1-3 inch

RECESSED PERIMETER

TYPE

PROJECT

P-MAX4 SHEETROCK TRIM (1”,2”, or 3” RECESSED)

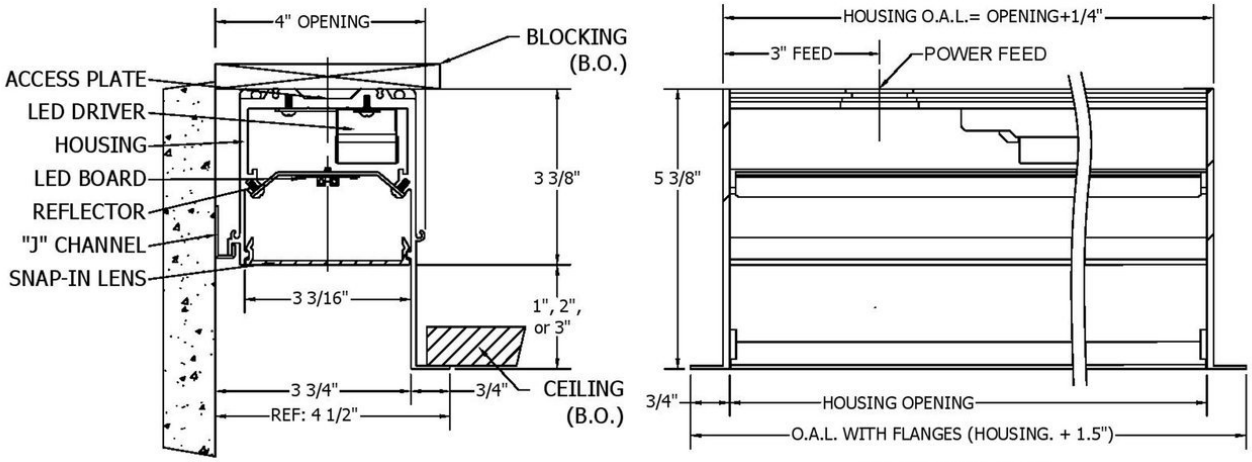

CROSS SECTION

SIDE SECTION

P-Max 4 Flush Lens or Regressed 1-3 inch

RECESSED PERIMETER

TYPE

PROJECT

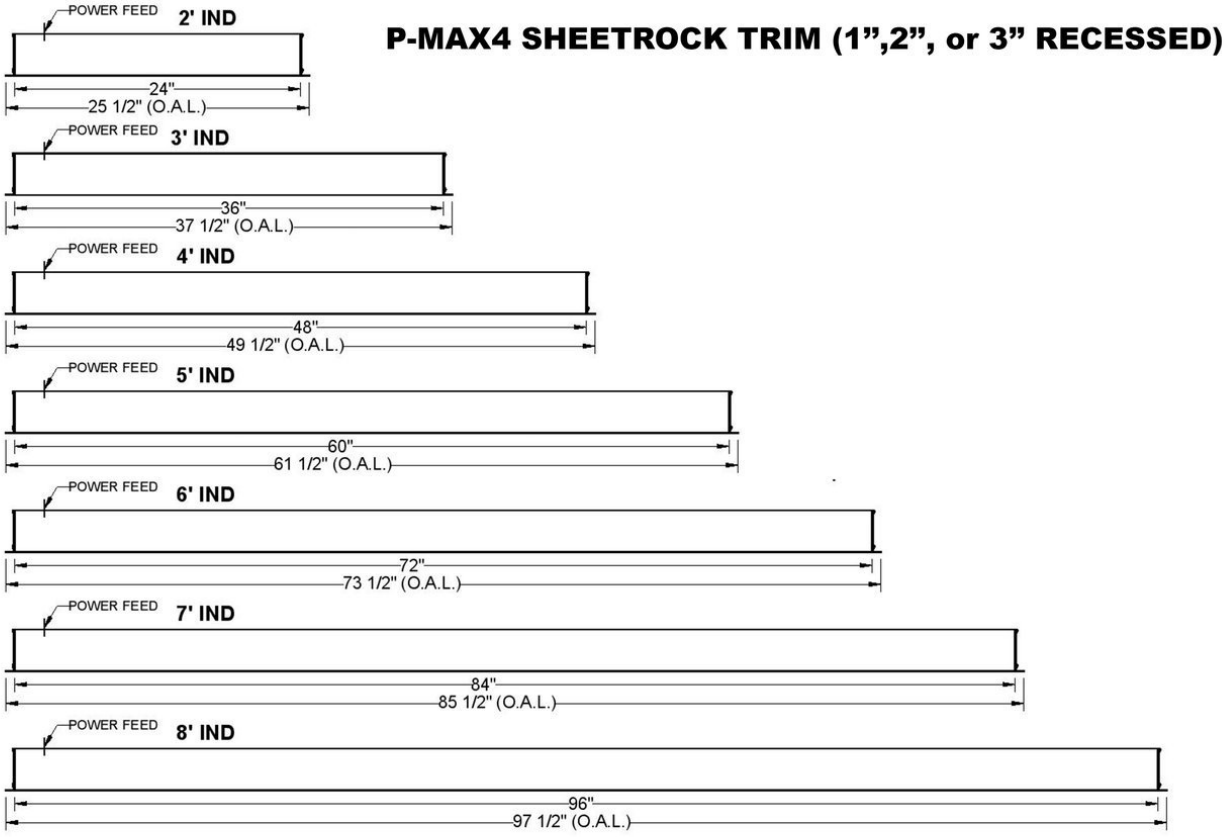

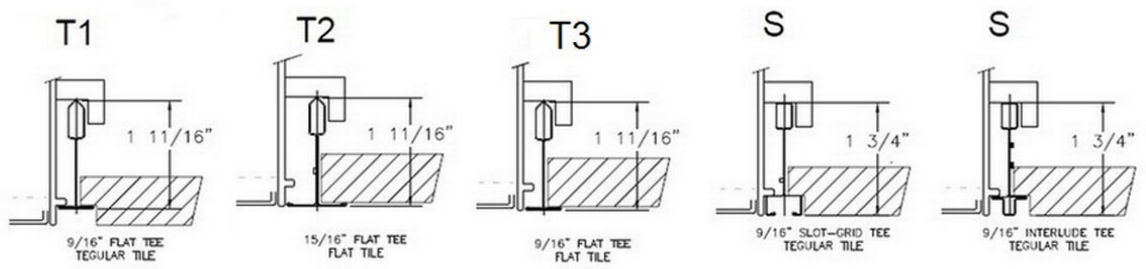

P-Max 4 Flush Lens or Regressed 1-3 inch

RECESSED PERIMETER

TYPE

PROJECT

P-MAX4 SHEETROCK TRIMLESS (1”,2”, or 3” RECESSED)

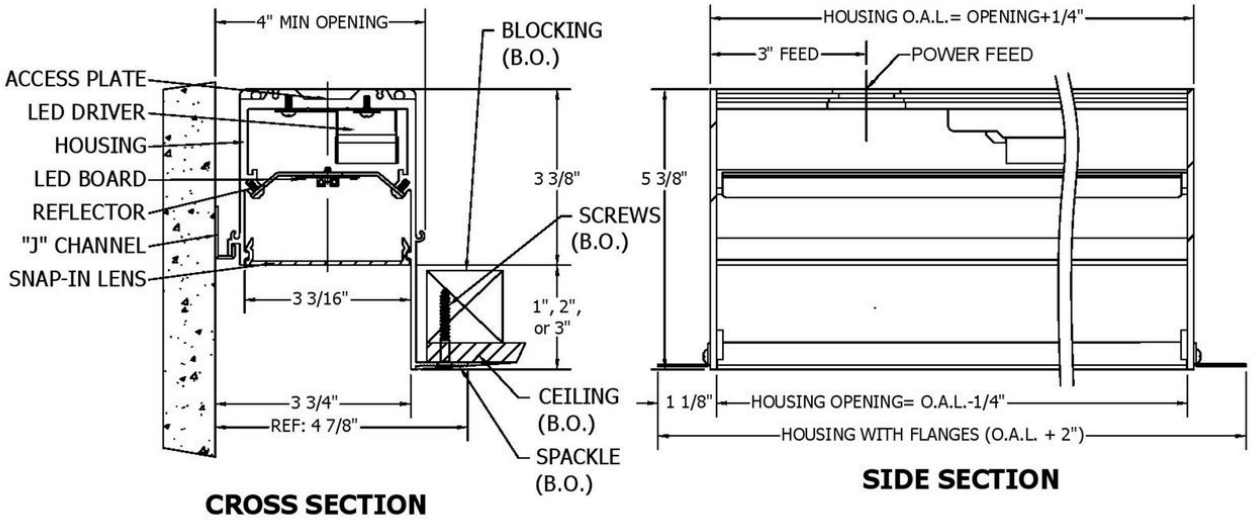

P-Max 4 Flush Lens or Regressed 1-3 inch

RECESSED PERIMETER

TYPE

PROJECT

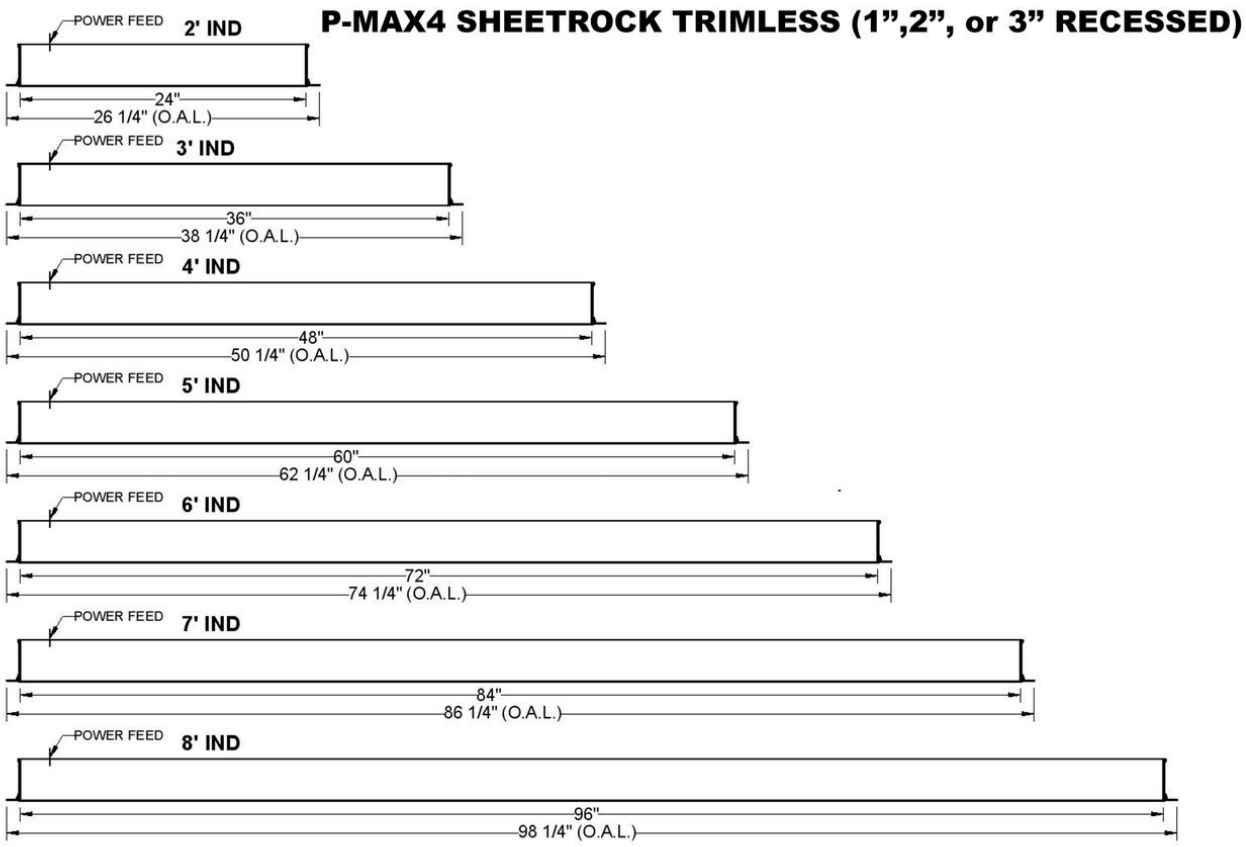

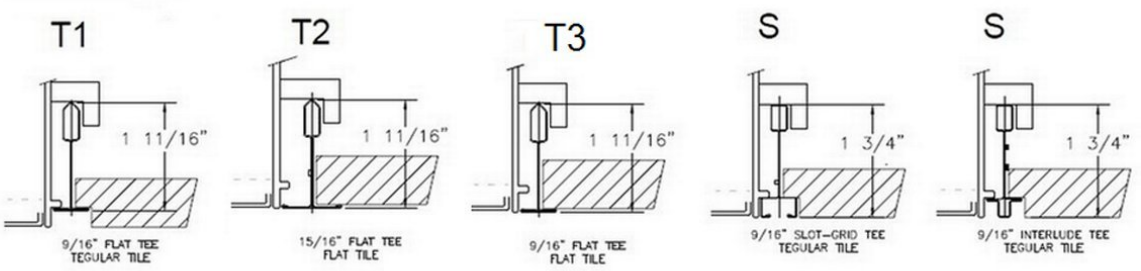

P-Max 4 Flush Lens or Regressed 1-3 inch

RECESSED PERIMETER

TYPE

PROJECT

P-MAX 4 ASYMMETRIC OPTIC LENS HALLWAY LIGHT

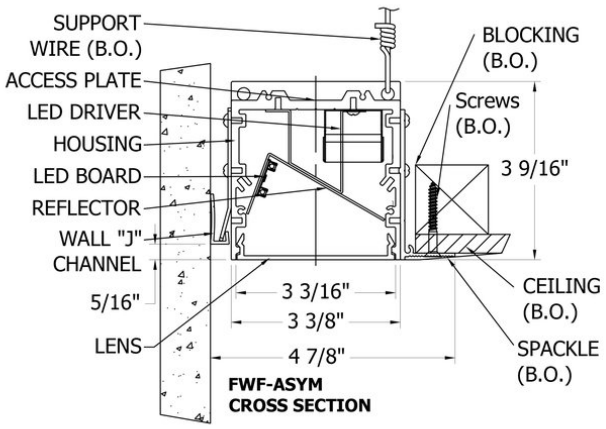

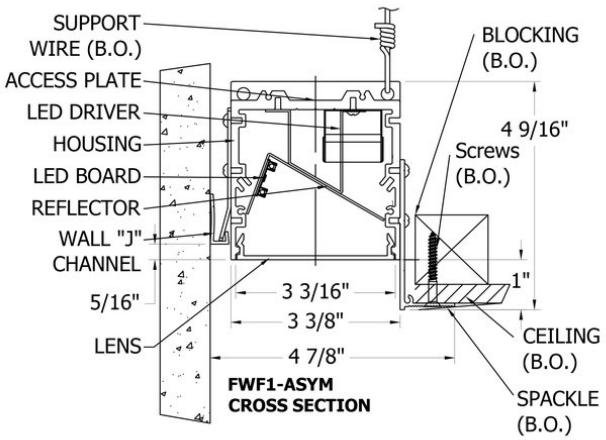

P-Max 4 Flush Lens or Regressed 1-3 inch

RECESSED PERIMETER

TYPE

PROJECT

Electrical / Driver

- Drivers - Our drivers are specifically selected based on fixture application to ensure ultimate reliability and long life. We use only UL recognized brands of LED drivers. Our LED drivers feature HPF (high power factor), universal voltage 110 - 277 VAC and include 0-10V dimming. Please note, 277v has longer distances from power feed to power feed then 120v.
- If required, we can supply premium drivers such as Lutron, Eldoled and others upon request. Advanced control systems compliant drivers such as POE,DALI, DMX, etc. are also available, please consult factory.
- Rated life (90% survivorship) of 50,000 hours at 50º C max. ambient (and 70º C max. case) temperature. At maximum driver load: Efficiency >84%, PF>0.9, THD
- POE - We are working with Molex/Igor POE systems. We can add a POE driver into our fixtures or remote them. Based on the fixture you select, we will notify you (or you can contact the factory) to see if we can install the P-driver or the P-driver needs to be remote. Just add POE1 in the spec and we will advise. Please keep in mind you need to specify a complete POE control system before specifying POE1.
- Our LED drivers feature HPF (high power factor), universal voltage 110 - 277 VAC and include 0-10V dimming.
- Emergency drivers are factory installed as an option, long life, high temperature, recyclable Ni-Cad battery pack with test switch and charge indicator. EMR is minimum of 90 minutes operation to meet code.
- Whip - Six feet long, wiring RHOS/Reach Compliant, 18 gauge, 600v rated, Specify wired to the fixture as an OPTION.

LED Perfomance

LED Output	CCT Color Temp	Watts	Lumens	Lumens per Watt	CCT Multiplier
Low	3000	3.8 WPF	350 LPF	92	2700=.95
Medium	3000	5.4 WPF	500 LPF	92	3000=1
High	3000	8 WPF	750 LPF	92	3500=1.01
Very High	3000	10.7 WPF	1000 LPF	92	4000/1.03

- The table above is a quick reference. When calculating loads make sure you add direct and indirect LPW to get total wattage. Please refer to photometric report for detailed information.
- Our light engines are precisely designed for optimal operation of LED assemblies.
- Our standard LED's CCT (correlated color temperature) range is 2700K to 4000K. Other CCT values are available upon request.
- We log LED bin codes for each project we supply to ensure color consistency and keep a record of those projects for future reference.
- CRI offered is 80+, and 90+ Note: on 90+ CRI use .85 multiplier
- Tunable white, warm dim and other special LED colors available.
- Custom Lumens Available
- We design our own printed circuit boards to ensure high luminescence efficiency, low thermal resistance and long-term reliable operation.
- Light engines are easily replaced.
- We use only recognized brand LED's with 3 SDCM (standard deviation color matching) with high color consistency. 2 SDCM available upon request.
- If you require a special LED manufacturer, please contact us. LED chip manufacturers used by Picasso are primarily (but not limited to) Nichia, Cree and Samsung.
- LRP - “LED Reel Program” – LED’s for printed circuit boards come on reels’ like old 8mm projectors and they're sold in lots just like fabric. At Picasso Lighting, we have a program where we make sure all of your reels come from the same lot for each project. This ensures excellent color consistency in large open spaces.
- LED life is rated at 50,000 hours

Certifications & Warranties

P-Max 4 Flush Lens or Regressed 1-3 inch

RECESSED PERIMETER

TYPE

PROJECT

- Limited five-year (50,000 hours) warranty on all products. Limited ten-year (100,000 hours) warranty on all Lutron drivers.
- I.C. rated fixtures are available upon request.
- Chicago Plenum and IC products are available upon request.
- Warranty does not cover damage caused by transport, damage caused by using the fixture in an area it is not UL rated for, damage caused by negligence, lack of maintenance, attempts to repair by unqualified or unauthorized personnel, by using non-original accessories/parts, fixtures installed in systems without power surge protection.
- UL and CUL listed for dry and damp locations.
- IBEW USA Union All fixtures are IBEW manufactured and assembled in the USA.
- We manufacture based on approved spec sheets and submittals signed by professionals responsible. Change orders must be in writing and will delay delivery.
- Picasso Lighting must receive in writing any thought to be defective products discovered, no later than 4 weeks from delivery to; ttoledo@picassoltg.com. Picasso Lighting will send a field technician to the site to evaluate the said defective product. We do accept field repair from licensed electrical contractors but not without a written agreement signed by Picasso Lighting official. Failure to adhere to all warranty and certifications will void any recompense and the warranty.

Note: Picasso lighting industries, LLC reserves the right to make any design changes which will not affect the overall appearance or performance of the product. All ceilings to be adequately reinforced by others. All fixtures to be wired by licensed electrician only. The information contained herein is the sole property of Picasso Lighting Industries, LLC and may not be used without prior written consent of Picasso Lighting Industries, LLC. The 'USGBC member logo' is a trademark owned by the U.S. Green building council and is used by permission. The logo signifies only that Picasso Lighting Industries, LLC is a USGBC member; USGBC does not review, certify, or endorse the products or services offered by its members.